CONNECTIONS:

MARK	DESCRIPTION	QTY.	SIZE	TYPE
A	STEAM OUTLET	1	12"	300# R.F.L.W.N.
B	SAFETY RELIEF VALVE	2	4"	300# R.F.L.W.N.
C	SAFETY RELIEF VALVE	1	6"	300# R.F.L.W.N.
D	FEEDWATER INLET	1	4"	300# R.F.W.N.
E	BOILER BLOWOFF	1	1 1/2"	300# R.F.S.O.
F	CHEMICAL FEED	1	1 1/2"	300# R.F.S.O.
G	VENT VALVE	1	1 1/4"	S.W.
H	WATER COLUMN	2	1 1/2"	SCH 80 PIPE
J	DRUM LEVEL TRANSMITTER	2	1 1/2"	SCH 80-PIPE
K	AUX. LOW WATER CUTOFF	1	1"	SCH 80 PIPE
L	CONTINUOUS BLOWDOWN	1	1 1/2"	SCH 80-PIPE
M	LOWER DRUM HEAT COIL	2	1"	N.P.T.
N	TEMP. AND PRESSURE GAUGE	4	1"	N.P.T.
P	FURNACE PRESSURE	1	1"	N.P.T.

CONNECTIONS CONT'D.

MARK	DESCRIPTION	QTY.	SIZE	TYPE
Q	MAIN STEAM OUTLET (50-01)	1	12"	300# R.F.W.N.
R	MAIN FEEDWATER INLET (50-02)	1	4"	300# R.F.W.N.
S	DRUM LEVEL TRANSMITTER DRAIN VALVE (50-01)	2	3/4"	NPT
T	CONTINUOUS BLOWDOWN DRAIN VALVE (50-02)	1	3/4"	NPT
U	AUX LOW WATER CUTOFF DRAIN VALVE (50-01)	1	3/4"	NPT
V	WATER COLUMN DRAIN VALVE (50-01)	2	3/4"	NPT
W	WATER LEVEL GAUGE DRAIN VALVE (50-01)	1	3/8"	NPT

DESIGN DATA

ONE (1) SHOP ASSEMBLED VOYAGER STEAM GENERATORS
DESIGN AND FABRICATED PER ASME SECTION 1, 2004 EDITION
2005 ADDENDA.
MAXIMUM ALLOWABLE WORKING PRESSURE: XXX PSIG
OPERATING PRESSURE; 120-150 PSIG AT NON-RETURN INLET
CAPACITY; 205,000#/HR @ XXX°F
DESIGN TEMP: XXX°F
TUBE DESIGN TEMP: XXX°F
HYDRO TEST PRESSURE XXX PSIG
RADIOGRAPH YES/NO
PWHT: DRUMS @ 1100° F MIN. HOLD TIME IS 1 HOUR / INCH THK.
BOILER HEATING SURFACE: TOTAL XXXXX SQ. FT
CONVECTION XXXX SQ. FT.
RADIANT XXXX SQ. FT.
STEAM PURITY: 1 PPM
BLOWDOWN: 1%
FEEDWATER TEMPERATURE: 227°F TO ECONOMIZER
FUELS: PRIMARY – NATURAL GAS
WATER CAPACITY: BOILER OPERATING XXXX GALS.
BOILER FLOODED XXXX GALS.
SHIPPING WEIGHT: XXXXXX LBS.
INSTALLATION: INDOORS

MECHANICAL DATA

CASINGS:
FRONT & REAR SEALS & SUPPORT: 1/4" CARBON STEEL PLATE
ROOF: 10 GA. CARBON STEEL
SIDE: 12 GA. SHEETING
DRUM: 16 GA. CARBON STEEL SHEET
DRUMS:
UPPER: 3/4" THK. (NOMINAL) SA-516 GR. 70 PVQ
LOWER: 5/8" THK. (NOMINAL) SA-516 GR. 70 PVQ
HEADS:
UPPER: 5/8" THK. SA-516 GR. 70
LOWER: 1/2" THK. SA-516 GR. 70
TUBES:
WELDED FURNACE WALL: 2" O.D X 0.135" WALL SA-178A ERW
CONVECTION: 2" O.D X 0.105" WALL SA-178A ERW
OUTER WELDED WALL: 2" O.D X 0.135" WALL SA-178A ERW
WELDED FRONT & REAR WALLS: 2" O.D. X 0.135" WALL SA-178A ERW

NOTES:

1. REFER TO THE EQUIPMENT LIST FOR ITEM DESCRIPTIONS AND DESIGN DATA.
2. MAIN STEAM, FEEDWATER AND DRAIN PIPING TO BE SUPPORTED IN FIELD BY OTHERS.
3. PAINT:
   ALL EXPOSED CARBON STEEL SURFACES OF THE BOILER AND CASING:
   SURFACE PREP: SSPC-SP3.
   PRIMER COAT: (1) COAT OF CARBOCOAT 150 UNIVERSAL PRIMER, 700 GREY, 2 TO 3 MILS DFT.
   FINISH COAT: (2) COATS OF CARBOTHANE 8812 DURING WARM WEATHER (MAX. 95°F @ 80% HUMIDITY) AND CARBOTHANE 8815 DURING COLD WEATHER (MIN. 35°F @ 10% HUMIDITY). T135 VICTORY BLUE, 2 TO 3 MILS DFT TOTAL. TOTAL MILS DFT: 4 TO 6.
   SUPPORT STRUCTURE, LADDERS, PLATFORMS AND HANDRAILS:
   SURFACE PREP: SSPC-SP3.
   FINISH: HOT DIP GALVANIZE.

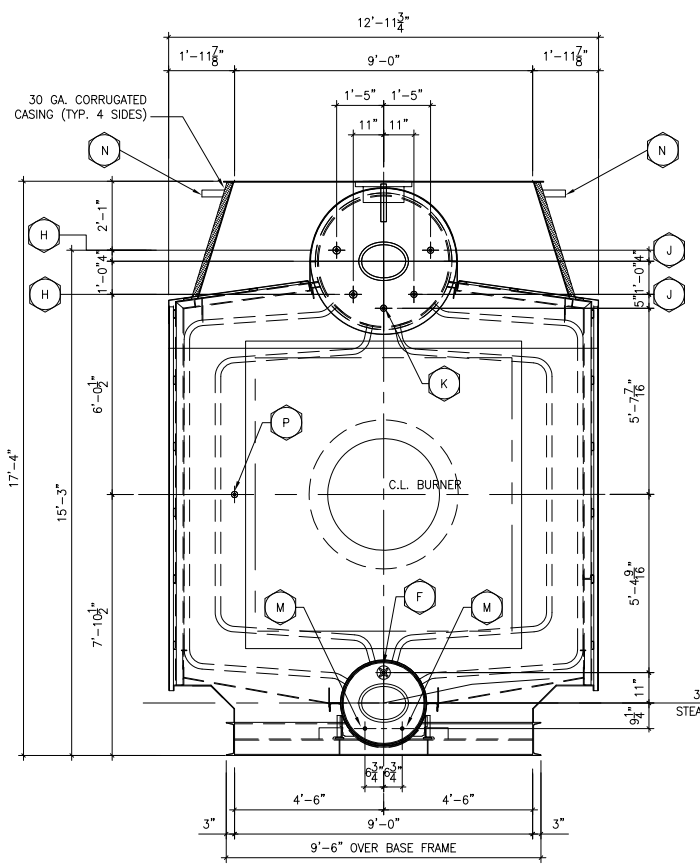

FRONT END WALL

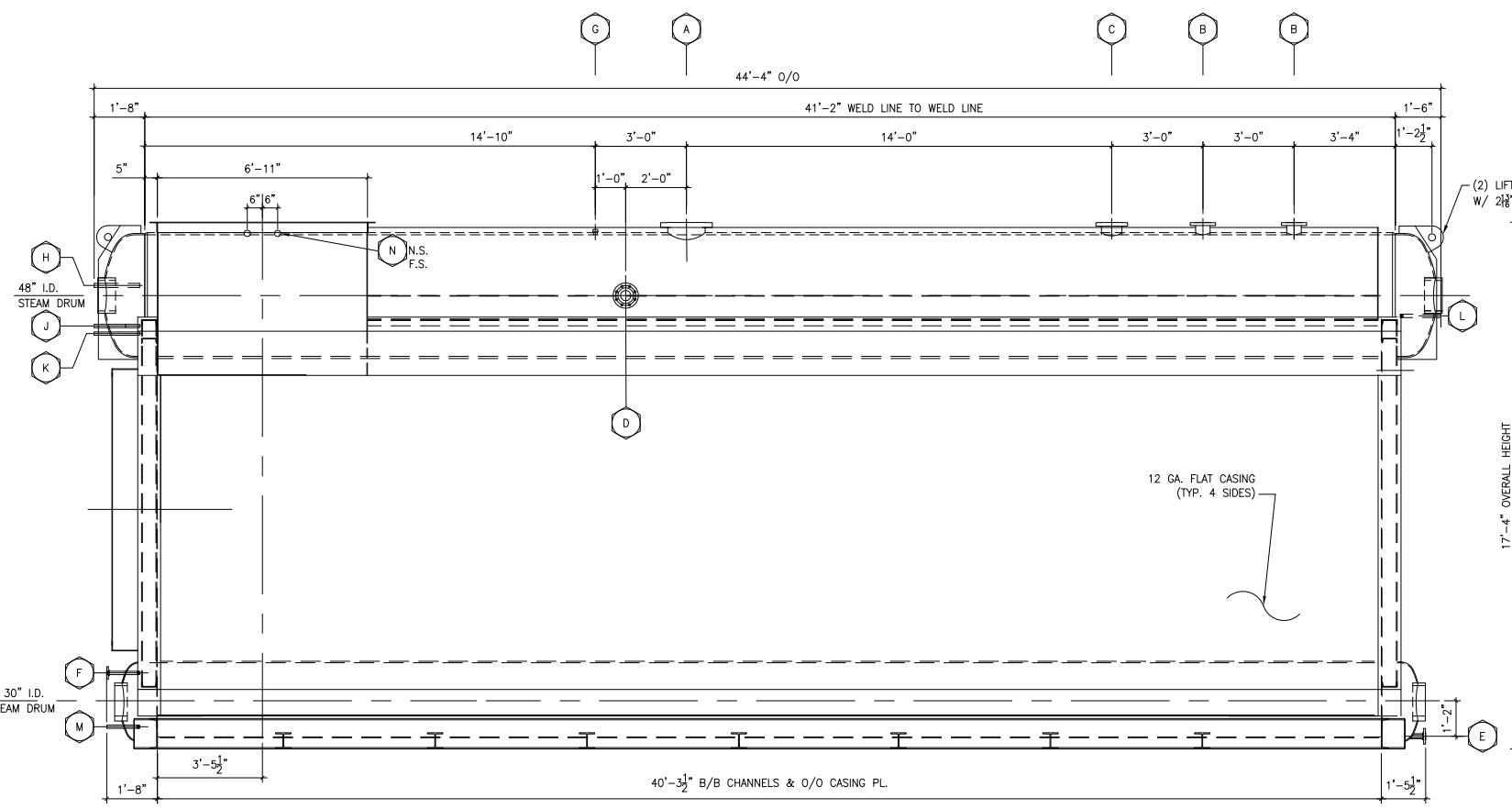

SIDE WALL

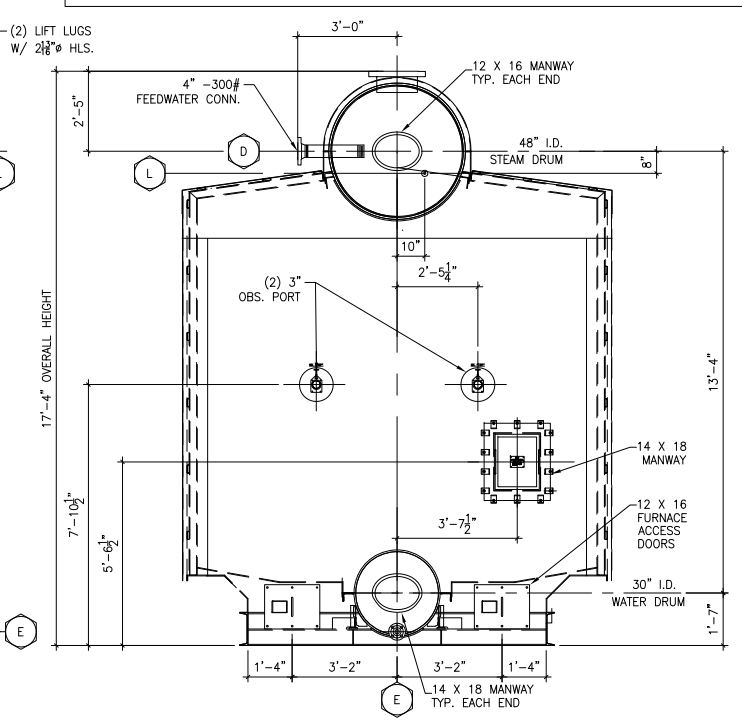

REAR END WALL

CUSTOMER'S NAME _____
CUSTOMER'S P.O. NO. _____
CUSTOMER'S JOB NO. _____
BOILER ITEM _____
SHIPPING WEIGHT _____
DESTINATION _____
NUMBER REQUIRED _____

TOLERANCE ± 1/8" UNLESS OTHERWISE NOTED.

THIS DESIGN OR DRAWING IS NOT SOLD AND IS SUBJECT TO RECALL. REPRODUCTION OR COPYING RIGHTS ARE RESERVED SOLELY TO VICTORY ENERGY OPERATIONS, L.L.C. THE DRAWING HAS BEEN DELIVERED AND RECEIVED ON THE EXPRESSED CONDITIONS THAT IT IS NOT USED IN ANY WAY AGAINST THE INTERESTS AND BENEFITS OF VICTORY ENERGY OPERATIONS, L.L.C., AND THAT THIS DRAWING AND ALL COPIES OF IT WILL BE RETURNED TO VICTORY ENERGY OPERATIONS, L.L.C. IMMEDIATELY UPON DEMAND, AND THAT ALL INFORMATION DISCLOSED BY THIS DRAWING TO THE HOLDER SHALL BE HELD IN CONFIDENCE.

rev.	by	date	chk'd	date	description
6					
5					
4					
3					
2					
1					

VICTORY ENERGY
10701 E. 126th St. North, Collinsville, OK 74021
PH: 918-274-0023 FAX: 918-274-0059

cust/proj.#:
title: BOILER GENERAL ARRANGEMENT

by:	chk'd:	aprv'd:	scale:	dwg. no:	rev:
date:	date:	date:	NONE	00-XXX-00	0