CONNECTIONS:				
MARK	DESCRIPTION	QTY.	SIZE	TYPE
A	STEAM OUTLET	1	12"	300# R.F.L.W.N.
B	SAFTEY RELIEF VALVE	1	2 1/2"	300# R.F.L.W.N.
C	SAFTEY RELIEF VALVE	1	3"	300# R.F.L.W.N.
D	FEEDWATER INLET	1	4"	300# R.F.W.N.
E	BOILER BLOWOFF	1	1 1/2"	300# R.F.S.W.
F	CHEMICAL FEED	1	1"	SCH. 80 NPT
G	VENT	1	1"	SCH. 80 NPT
H	WATER COLUMN	2	1"	SCH. 80 NPT
J	DRUM LEVEL TRANSMITTER	2	1"	SCH. 80 NPT
K	AUX. LOW WATER CUTOFF	1	1"	SCH. 80 NPT
L	CONTINUOUS BLOWDOWN	1	1"	SCH. 80 NPT
M	HEATING COIL	1	1 1/2"	300# R.F.S.W.
N	FURNACE PRESSURE	1	1"	SCH. 80

NOTE:
ALL MATERIAL AND FABRICATION TO BE PER A.S.M.E. CODE SECTION I LATEST EDITION LATEST ADDENDA.

ONE (1) SHOP ASSEMBLED DISCOVERY SERIES STEAM GENERATOR
BOILER HEATING SURFACE: TOTAL XXX SQ. FT.
CONVECTION XXX SQ. FT.
RADIANT XXX SQ. FT.
DESIGN PRESSURE: XXX PSIG @ XXX° F.
OPERATING PRESSURE: XXX PSIG
CAPACITY: XXX #/HR
FEEDWATER TEMPERATURE: XXX° F.
FUELS: MAIN: XXX
INSTALLATION: INDOORS/OUTDOORS

ALL EXPOSED CARBON STEEL SURFACES OF THE BOILER AND CASING EXCEPT FOR THE FLUE GAS OUTLET FLANGE, DRUM HEAD COVERS AND PIPING.
SURFACE PREPARATION: SSPC-SP3
PRIMER COAT: APPLY 2 TO 3 MILS DFT OF CARBOCOAT 150 0700 GRAY
FINISH COAT: APPLY 2 TO 3 MILS DFT OF CARBOCOAT 8812 T135 DURING WARM WEATHER (MAXIMUM 95°F @ 80% HUMIDITY) AND CARBOTHANE 8815 T135 IN THE COLD WEATHER (MINIMUM 35°F @ 10% HUMIDITY).
TOTAL MILS DFT: 4 to 6

DRUM HEAD COVERS & FLUE GAS OUTLET FLANGE:
SURFACE PREPARATION: SSPC-SP3
PRIMER/FINISH COAT: CARBOCOAT 150 0700 GRAY
TOTAL MILS DFT: 2 to 3

PIPING COMPONENTS:
SURFACE PREPARATION: SSPC-SP3
PRIMER/FINISH: H.I.S. HI TEMP GRAY 90G07
TOTAL MILS DFT: 2 to 3

VALVE HANDLES:
SURFACE PREPARATION: SSPC-SP3
PRIMER COAT: CARBOCOAT 150 0700 GRAY
FINISH COAT: CARBOTHANE 8815 T135 YEAR AROUND.
TOTAL MILS DFT: 2 TO 3

HOT DUCTING (>200°F):
SURFACE PREPARATION: SSPC-SP3
PRIMER/FINISH: H.I.S. HI TEMP GRAY 90G07
TOTAL MILS DFT: 2 to 3

SUPPORT STRUCTURES, LADDERS, PLATFORMS, AND HANDRAILS:
HOT DIPPED GALVANIZED

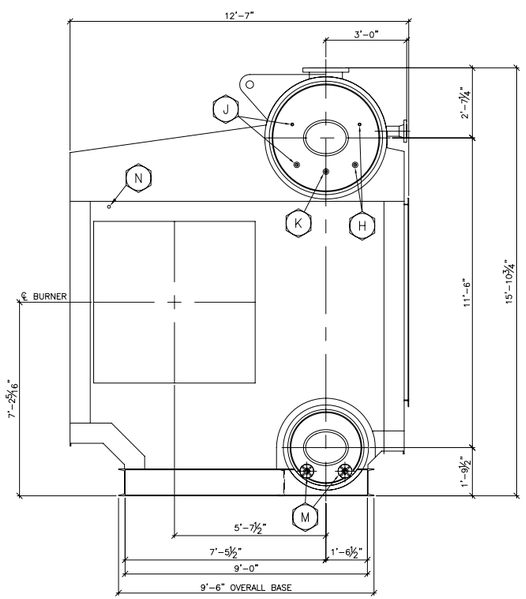

BOILER FRONT VIEW

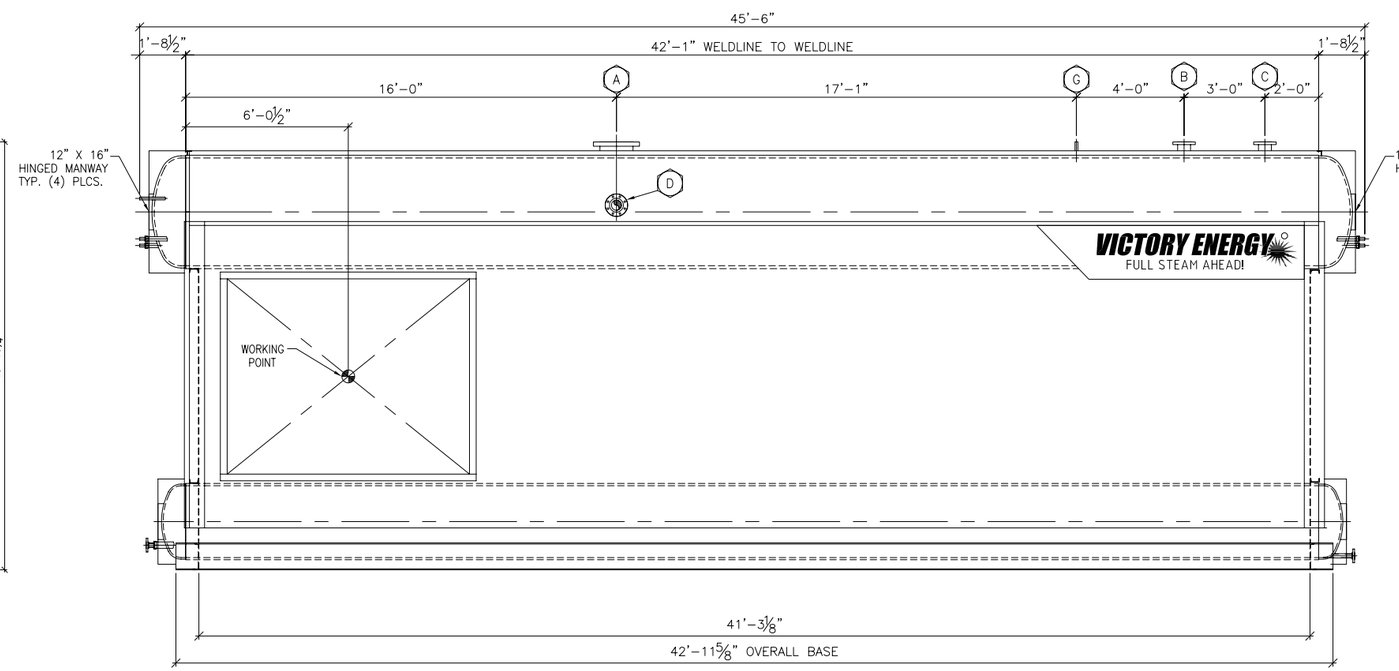

BOILER SIDE VIEW

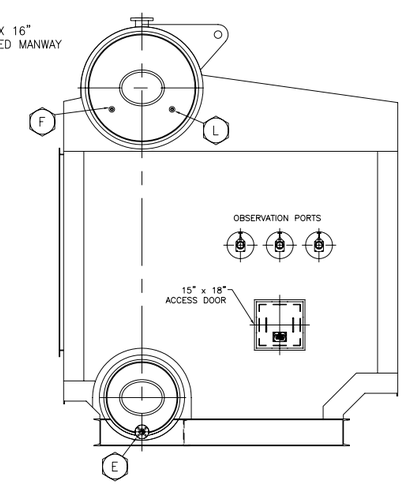

BOILER BACK VIEW

DISCOVERY series

THIS DESIGN OR DRAWING IS NOT SOLD AND IS SUBJECT TO RECALL. REPRODUCTION OR COPYING RIGHTS ARE RESERVED SOLELY TO VICTORY ENERGY OPERATIONS, L.L.C. THE DRAWING HAS BEEN DELIVERED AND RECEIVED ON THE EXPRESSED CONDITIONS THAT IT IS NOT USED IN ANY WAY AGAINST THE INTERESTS AND BENEFITS OF VICTORY ENERGY OPERATIONS, L.L.C., AND THAT THIS DRAWING AND ALL COPIES OF IT WILL BE RETURNED TO VICTORY ENERGY OPERATIONS, L.L.C. IMMEDIATELY UPON DEMAND, AND THAT ALL INFORMATION DISCLOSED BY THIS DRAWING TO THE HOLDER SHALL BE HELD IN CONFIDENCE.

rev.	by	date	chk'd	date	description
6					
5					
4					
3					
2					
1					

VICTORY ENERGY
10701 E. 126th St. North, Collinsville, OK 74021
PH: 918-274-0023 FAX: 918-274-0059

cust/proj.#: DT-4
title: BOILER GENERAL ARRANGEMENT

by:	chk'd:	aprv'd:	scale:	dwg. no:	rev:
date:	date:	date:	NTS	00-XXX-00	0